THINK SECURITY
THINK CP PLUS

CP PLUS

# CP-UNC-TC41L5C-VMD-LQ

## 4MP Dual Light Bullet Camera - 50Mtr.

GOVERNMENT APPROVED CYBER SECURED

- 1/2.7" 4MP PS CMOS Image Sensor (0.9407 Centimeters)
- Max. 4MP (2688 × 1520)@1–25/30fps/ (2560×1440)@1–25/30fps
- Instastream, H.265, H.264, H.264H, H.264B, MJPEG
- Support Quad stream
- WDR(120dB), Day/Night(ICR), 3D NR, ROI, AWB, AGC, BLC, HLC, Digital watermarking
- IR Range of 50 Mtr., Warm Light Range of 30 Mtr.
- 3.6mm Lens (6mm Optional)
- Support Starlight Technology
- Micro SD Card, PoE, IP67, IK10 (optional)

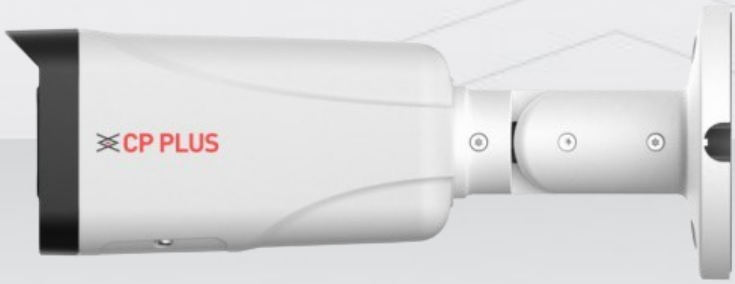


ctc CP PLUS TRUSTED CORE TECHNOLOGY

illumax Dual Light

4MP | Built-in Mic | WDR | Starlight | IK 10 | IP67

### System Overview

The CP PLUS Advanced Dual Light Cameras provide the perfect solution for elevating your security system. Designed for superior adaptability, these cameras support multiple illumination modes and advanced monitoring features, ensuring unmatched performance in various environments.

### CTC Technology:

CP PLUS Trusted Core Technology is a multi-layered security architecture that brings together the best of cyber security practices and technological intelligence. It is not just an enhancement; it is a complete redefinition of how surveillance should function in today's digital landscape - more intelligent, more secure, and more reliable than ever before.

CE FC RoHS COMPLIANT ONVIF

*Product casing and specifications are subject to change without prior notice*

THINK SECURITY
THINK CP PLUS

CP PLUS

# CP-UNC-TC41L5C-VMD-LQ

## 4MP Dual Light Bullet Camera - 50Mtr.

## Functions

### Instastream

This camera has been designed with the latest and most efficient innovation among the standard video compression designs. Smart encoding algorithms developed by CP PLUS help in saving up to 70% more bandwidth than H.265 along with making it more beneficial for minimizing bandwidth and storage costs. It enhances video coding efficiency while providing high resolution and the rate of frame in the video using Intelligent Region Perception to detect motion in each frame.

### True Day/Night

When the scene is too dark, the image is captured by illuminating an infrared light through the camera onto the scene that greatly helps with making the scene visible for the lens. It delivers color images during the day and automatically switches to the monochrome feature as the scene darkens.

### Regions of interest

Regions of Interest (ROI) is a user defined feature that allows the operator to monitor specific areas of a scene while still maintaining overall situational awareness of less important areas.

### Power over Ethernet (PoE)

CP PLUS cameras with Power over Ethernet (PoE) technology offer a simple and efficient installation by using a single Ethernet cable to deliver both power and data. This eliminates the need for separate power adapters, reduces cable clutter, and ensures a cleaner setup.

## About CP PLUS

The brand that is on its way to lead the world when it comes to the security and surveillance industry, CP PLUS, keeps bombarding the market with the most reliable range of products that have been designed carefully and methodically to automate the whole surveillance and security process, no matter how big your premises are.

It was the initiative to help the public in the area where they are the most vulnerable and to empower the sense of safety in our hearts that had conceptualized CP PLUS. And embarking on its mission to make the world a safer and more secure place has taken the brand's journey to unprecedented levels even when compared to international competitors.

*Product casing and specifications are subject to change without prior notice

THINK SECURITY
THINK CP PLUS

CP PLUS

# CP-UNC-TC41L5C-VMD-LQ

## 4MP Dual Light Bullet Camera - 50Mtr.

| Feature | Specification |
|---|---|
| Image Sensor | 1/2.7" 4MP PS CMOS Image Sensor (0.9407 Centimeters) |
| Effective Pixels | 2688 (H) × 1520 (V) |
| Minimum Illumination | 0.001 lux@F1.4 (Color, 30 IRE), 0.0001 lux@F1.4 (B/W, 30 IRE), 0 lux (IR on) |
| Shutter Speed | Auto/Manual 1/3 s–1/100,000 s |
| Angle Adjustment | Pan: 0°–360°, Tilt: 0°–90°, Rotation: 0°–360° |
| White Balance | Auto, Natural, Street lamp, Outdoor, Manual, Regional custom |
| RAM | 128 MB |
| ROM | 128 MB |
| DORI Distance | 3.6mm: 58.89 m (Detect), 23.60 m (Observe), 11.79 m (Recognize), 5.90 m (Identify)<br>6mm: 85.5 m (Detect), 34.2 m (Observe), 17.1 m (Recognize), 8.5 m (Identify) |
| Gain Control(AGC) | Auto/ Manual |
| Lens Type | Fixed-focal |
| Max. Aperture | F1.4 |
| Close Focus Distance | 3.6mm: 1.3 m; 6mm: 2.6 m |
| Lens | 3.6mm (6mm Optional) |
| Lens Mount | M12 |
| S/N Ratio | >58 dB |
| Back Light Compensation | BLC/ HLC/ WDR(120dB) |
| Angle of View | 3.6 mm: H: 84°; V: 44°; D: 105°<br>6 mm: H: 54°; V: 29°; D: 63° |
| Smart IR | Support |
| IR Control | Auto, Manual |
| IR Number | 2 IR LED, 2 Warm Light |
| IR | IR Range of 50 Mtr. |
| Warm Light | Warm Light Range of 30 Mtr. |
| Smart Illumination | Support |
| Day/Night | Auto(ICR)/Color/B/W |

CE FC RoHS COMPLIANT ONVIF

*Product casing and specifications are subject to change without prior notice

| Feature | Specification |
|---|---|
| Audio | Built-in Mic |
| Video Compression | Instastream, H.265, H.264, H.264H, H.264B, MJPEG (Only supported by sub stream) |
| Iris Control | Fixed |
| Stream Capability | Quad Stream |
| Frame Rate | Main stream: 4MP (2688 x 1520/ 2560 x 1440)@1–25/30fps, 3MP (2304 x 1296)@1–25/30fps, 2MP (1920 × 1080)@1–25/30fps, 1.3MP (1280 × 960)@1–25/30fps, 720p (1280 × 720)@1–25/30fps<br>Sub stream 1: 720p (1280 × 720)@1–25/30fps, D1 (704 × 576 / 704 × 480)@1–25/30fps, VGA (640 × 480)@1–25/30fps, CIF (352 × 288/ 352 × 240)@1–25/30fps<br>Sub Stream 2: D1 (704 × 576/ 704 × 480)@1–25/30fps, VGA (640 × 480)@1–25/30fps, CIF (352 × 288/ 352 × 240)@1–25/30fps<br>Sub Stream 3: D1 (704 × 576/ 704 × 480)@1fps |
| Mirror Function | Support |
| Noise Reduction | 3D NR |
| Motion detection | OFF/ON (4 areas, rectangular) |
| Resolution | 4MP (2688 x 1520)/(2560 × 1440), 3MP (2304 × 1296), 2MP (1920 × 1080), 1.3MP (1280 × 960), 720p (1280 × 720), D1 (704 × 576/704 × 480), VGA (640 × 480), CIF (352 × 288/352 × 240) |
| Video format | PAL/NTSC |
| Privacy Mask | 4 areas |
| IVS(Perimeter Protection) | Tripwire, Intrusion, IMD (Intelligent motion detection) |
| ROI | Support (4 areas) |
| Audio Input | 1 Channel (RCA port) |
| Audio Output | 1 Channel (RCA port) |
| OSD | Camera title, Date & Time |
| Audio Compression | G.711a, G.711Mu, G.726, PCM, AAC |
| Protocol | SFTP, IPv6, IPv4, DNS,RTCP, NTP, RTP, RTMP, HTTP, HTTPS, SNMP V3, TLS Version 1.2, TCP/IP, PPPoE, NFS, UDP, ICMP, IGMP, SSL, DHCP, SMTP, RTSPS, ONVIF (Profile S, Profile G, Profile T), unicast, multicast |
| SDK and API | Support |
| Ethernet | RJ-45 (10/100 Base-T) |
| Image Rotation | 0°/90°/180°/270° (Support 90°/270° with 2688 × 1520 resolution and lower) |
| Alarm IN | 1 Channel in: 5 mA 3–5 VDC |
| Alarm Out | 1 Channel out: 300 mA 12 VDC |

*Product casing and specifications are subject to change without prior notice

| Feature | Specification |
|---|---|
| Bit Rate | H.265: 3 kbps-6144 kbps, H.264: 8 kbps-6144 kbps |
| Bit Rate Control | CBR/ VBR |
| Storage | SFTP, Mirco SD card (Max. 512GB) |
| Smart search | Work together with Smart NVR to perform refine intelligent search, event extraction and merging to event videos |
| Alarm Event | No SD card, SD card full, SD card error, Network disconnection, IP conflict, illegal access, Motion detection, Video tampering, Tripwire, Intrusion, Audio detection, Voltage detection, IMD (Intelligent motion detection), Security exception, External alarm |
| Cyber Security | AES 256-bit Encryption, Configuration encryption, trusted execution, Digest, security logs, WSSE, account lockout, syslog, video encryption, IP/MAC filtering, HTTPS, trusted upgrade, trusted boot |
| Browser | IE, Chrome, Firefox |
| User/Host | 6 (Total bandwidth: 36 M) |
| Hardware Reset Point | Support |
| Certificates | ISO 9001: 2015, ISO 20000-1 : 2018, CE, FCC and RoHS, BIS, STQC approved compliance report |
| Power Source | 12 VDC/PoE (802.3af) |
| Power Consumption | Basic: 2 W (12 VDC); 2.6 W (PoE)<br>Max. (H.265+ intelligence on + WDR + illuminator on): 6.1 W (12 VDC), 7.2 W (PoE) |
| Weatherproof Standard | IP67 & IK10 (optional) |
| Operating Temperature | –40 °C to +60 °C (–40 °F to +140 °F) |
| Operating Humidity | ≤95% |
| Storage Temperature | –40 °C to +60 °C (–40 °F to +140 °F) |
| Storage Humidity | ≤95% |
| Casing | Metal |
| Dimension | 238.5 mm × 90.7 mm × 90.7 mm |
| Weight | 720g |

**Published Date –08-05-2026**

*Product casing and specifications are subject to change without prior notice

## Dimensions (mm/inch)

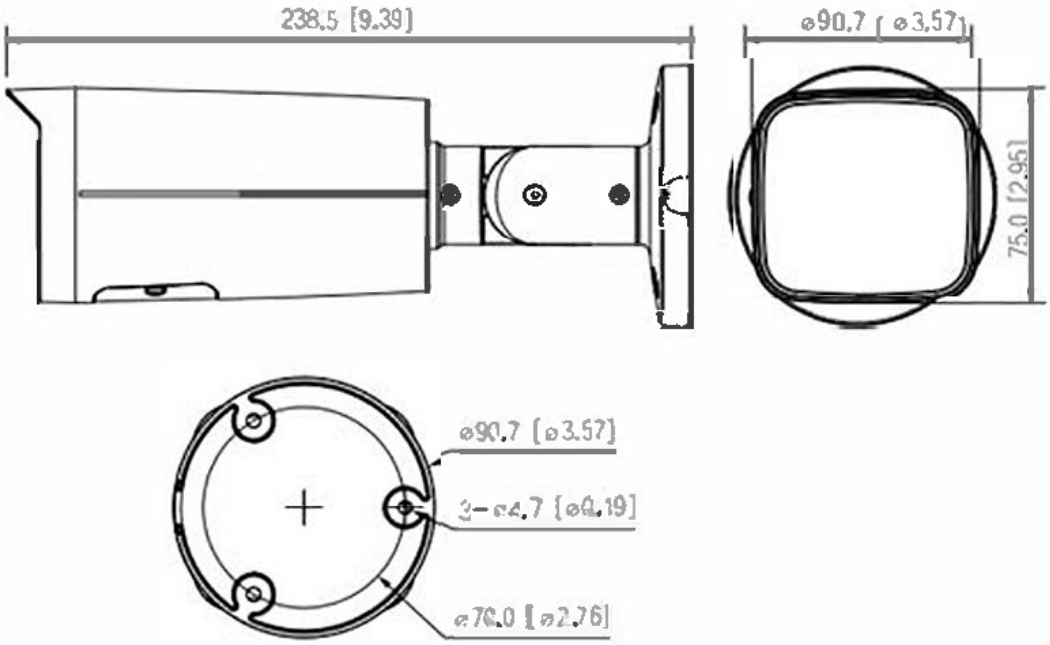


**Company Name:**
CP PLUS (Aditya Infotech Ltd.)
F-28 Okhla Industrial Area, Phase 1,
New Delhi 110020, INDIA
**Contact Mail ID** :- customercare@cpplusworld.com

*Product casing and specifications are subject to change without prior notice